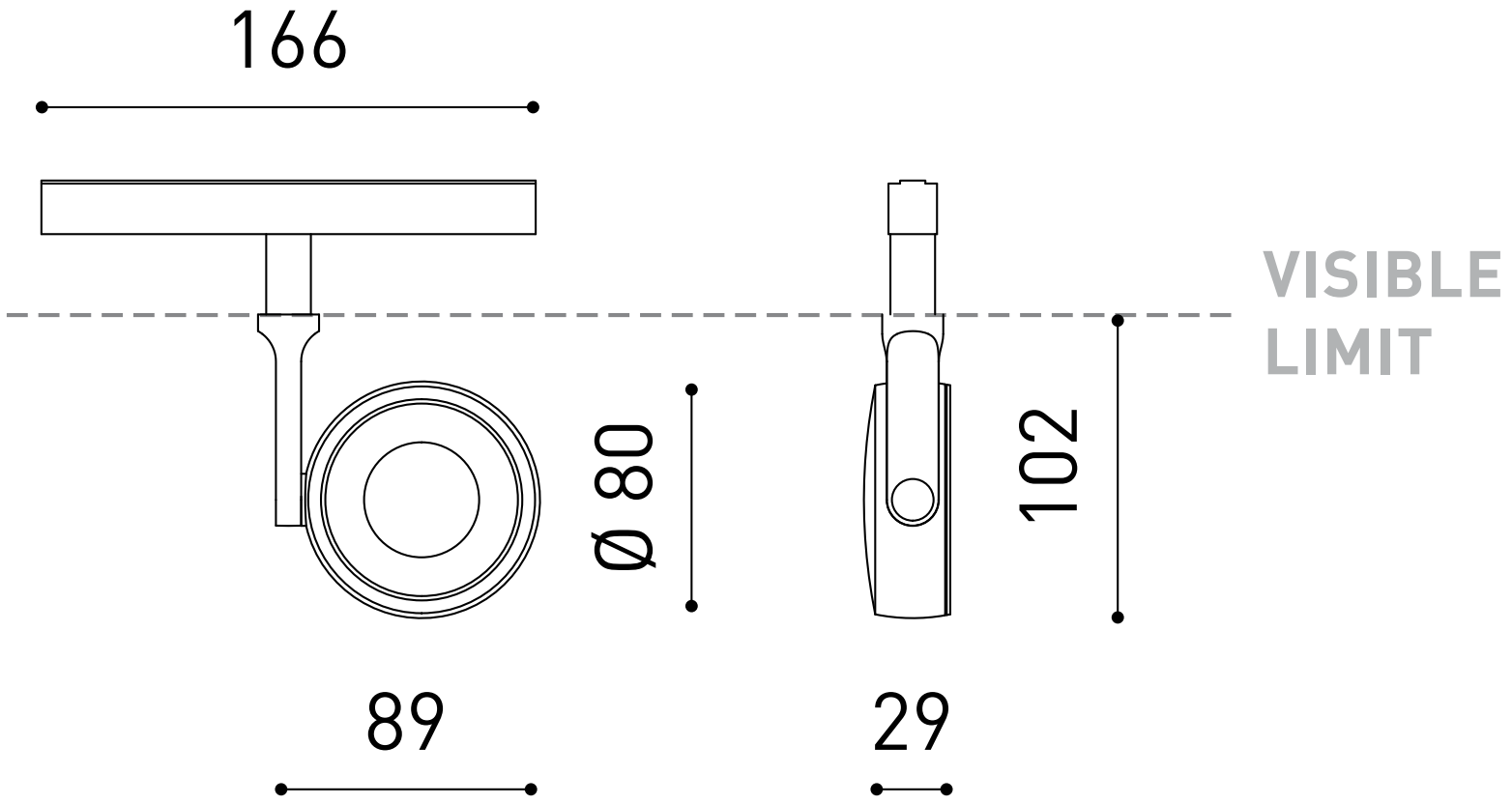
166
VISIBLE
LIMIT
Ø 80
102
89
29